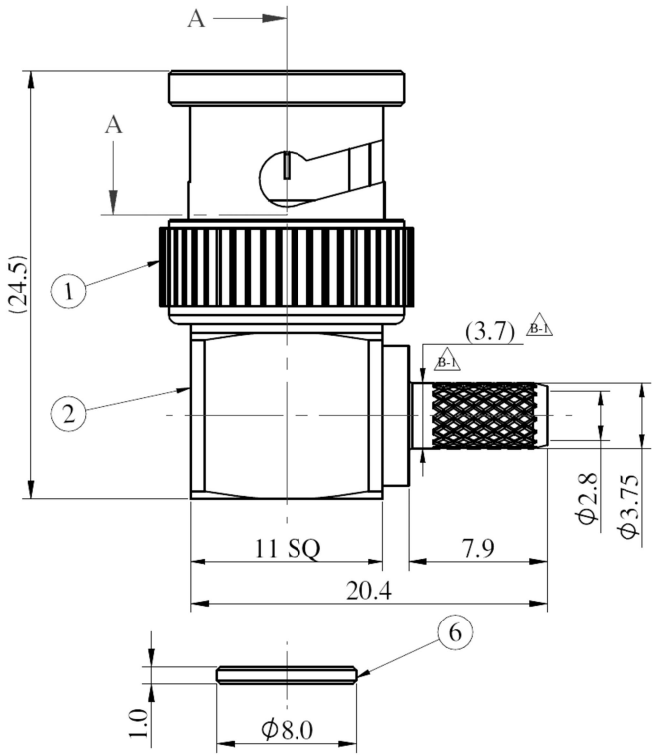

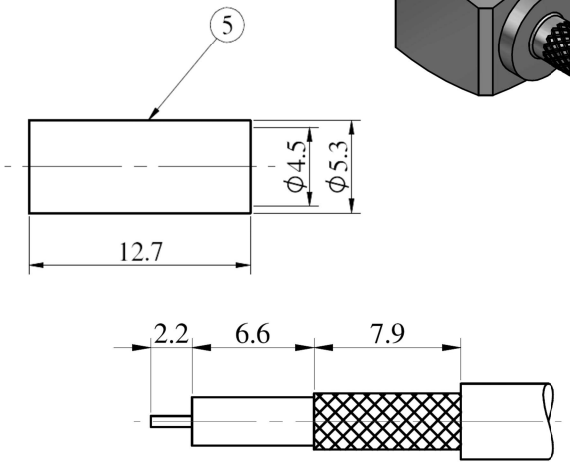

Recommended Cable Stripping Dimesions

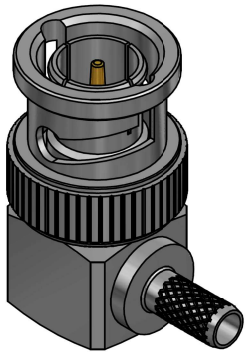

Electrical (See Note 1) :

Impedance : 75 ohm
Voltage Rating : 500 Vrms.(depending on cable)
Insulator Resistance : ≧5 Gohm
Dielectric Withstanding Voltage : 1500 Vrms .
Contact Resistance : Center Contact ≦ 1.5 mohm.
: Outer Contact ≦ 1.0 mohm.

Mechanical (See Note 1) :

Mating : Bayonet Coupling.
Recommended Mating Torque : 0.6~2.5 lbs
Coupling Nut Retention Force : ≧101.2 lbs

Environmental (See Note 1) :

Temperature Range : -65°C to 165°C
Corrosion(Salt Spray) : MIL-STD-202, Method 101, Cond. B
Vibration : MIL-STD-202, Method 204, Cond. G
Thermal Shock : MIL-STD-202, Method 107, Cond. B
Mechanical Shock : MIL-STD-202, Method 213, Cond. B

Finish [Unit of Plating Thickness Is in Micro Inch(μ)]
1. Nickel Plating Thk. : 50 μ"min. (Under Plating)
2. Gold Plating Thk. : 1~2 μ"max. (Over Finish 1)

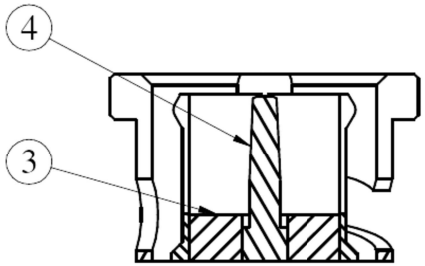

A-A

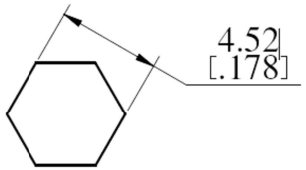

Recommended Crimping Dimensions for Ferrule

ITEM	Description	Material
6	Cap	Brass
5	Ferrule	Brass
4	Inner Contact	Brass
3	Insulator	PTFE
2	Body	Brass
1	Shell	Brass

ISSUE	CHANGE	DATE
1.3	Dim added B-1	09/01/23
1.2	Data chg to 75 Ohm	22/09/21
1.1	Data removed	10/08/21
1.0	Origin	10/08/21
Origin	K Page	10/08/21
Drn.	K. Page	09/01/23
Chkd.		
Dwg. No.	XBT-1072-NGBA	

TITLE	6GHz BNC 75 Ohm R/A Plug, Crimp Type for 1855A Cable
RoHS Compliant	**Cambridge Electronic Industries Ltd** Denny Industrial Centre, Waterbeach, Cambs. CB25 9QR Tel: 01223 860041